TOTAL AUTOMOTIVE
LIFTING SOLUTIONS INC.

MOBILE COLUMNS
MCO19B-4-76B MCO14.5B-4-58W

HEAVY DUTY BUS, TRUCK & OFF ROAD LIFTING
PORTABLE MOBILE COLUMNS PROVIDE THE FREEDOM & FLEXIBILITY TO LIFT ANY VEHICLE ANYWHERE

"WIRELESS" OR CABLE MOBILE COLUMNS

19,000 LB. / 8.6T OR 14,500 LB. 6.5T /6.5T

24 VOLT BATTERY

POWERED MOBILE COLUMNS

THE MOST DURABLE HEAVY-DUTY LIFT LINE IN THE INDUSTRY

INDEPENDENTLY TESTED ALI CERTIFIED AND VALIDATED ®

#MCO19B-4-76B
MCO14.5-4-58W

AUTHORIZED USE
WIRELESS PATENT
US 7,014,012 B2

FEATURES

LOW PROFILE 15.3"/ 389MM
ADJUSTABLE FORKS

PREMIUM BOSCH POWER UNITS

"EASY STEER" PALLET JACK STYLE
STEERING SYSTEM

July 2022

CONTACT US NOW

CALL: 866-799-5438
WWW.TLSLIFTS.COM

THE LIFTSUPERSTORE
RETAIL LOCATIONS THROUGHOUT CANADA
HEADOFFICE & WAREHOUSE
2300 SPEERS RD OAKVILLE ONTARIO

TLS_Mobile_Column_Brochure Generic 4 Page 19,000-14.500July 14 2022.indd 1 2022-07-14 1:01 PM

TOTAL AUTOMOTIVE
LIFTING SOLUTIONS INC.

MOBILE COLUMNS

MCO19B-4-76B MCO14.5B-4-58W

IMPROVE PRODUCTIVITY WITH YOUR OMER MCO COLUMNS BY ADDING THESE PURPOSE BUILT ACCESSORIES

MCO ACCESSORIES

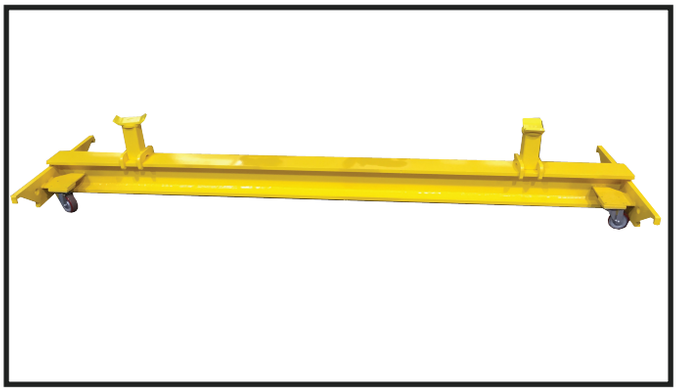

CHASSIS LIFTING BEAM FOR LIFTING THE VEHICLE FOR WHEEL FREE PURPOSES #MCOCLB-38

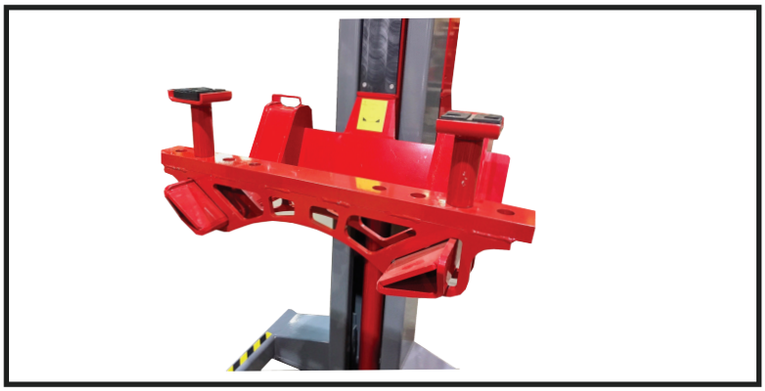

LIGHT TRUCK ADAPTER USED IN PAIRS TO LIFT BY THE FRONT & REAR OF LIGHT TRUCKS #MCOLTA

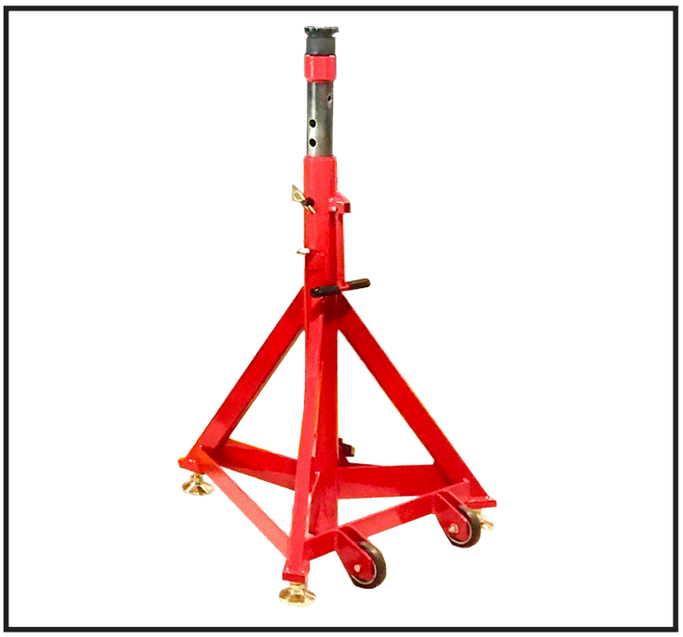

ADJUSTABLE 19,000 LB. / 8.6.T HIGH WHEELS STANDS #MCOAWS-19-54-83

FORK LIFT ADAPTER RAMP KIT FOR MOST 4 WHEEL FORK TRUCKS #MCOFLA

MOBILE COLUMNS 19,000 LB./ 8.6T OR 14,500 LB. / 6.6T CAPACITY

SET OF 4 MCO19B-4-76B
SET OF 4 MCO14.5B-4-56W

AT TLS OUR GOAL IS TO BUILD LIFTS THAT LAST LONGER, PERFORM BETTER AND COST LESS TO OPERATE

SPECIFICATIONS	19,000 LB. / 8.6T CAPACITY	14,500 LB. / 6.5T CAPACITY
MAX. NUMBER OF COLUMNS	10	8
LOAD SUPPORT	ADJUSTABLE FORKS 15.3" / 389MM	ADJUSTABLE FORKS 13.6" / 345MM
TIRE SIZES	23.6" - 53.1" / 599 TO 1249MM	25.6" - 53.1" / 650 TO 1249MM
SUPPORT FRAME HEIGHT	4" / 102MM	4.72" / 120MM - 3.937" / 100MM LEG EXTENSIONS
SAFETY LOCKING	HYDRAULIC + MECHANICAL EVERY 3.5"/ 89MM	HYDRAULIC + MECHANICAL EVERY 3.34"/ 85MM
STROKE	69" / 1753MM	69" / 1753MM
LIFTING/LOWERING TIME	85 SEC.	85 SEC.
REAR TRAVELING DEVICE	SPRING LOADED 6.3" / 160MM WHEEL	DUAL HYDRAULIC SUSPENSION 7.87" / 200MM WHEEL
POWER VOLTAGE	24V	24V
AVERAGE NUMBER OF LIFT CYCLES PRIOR TO RE-CHARGE	25	25
MOTORS	4 HP / 3 KW	4HP / 2.2 KW
BATTERY CAPACITY	100 AH	55 AH OR 80 AH
CHARGING SYSTEM REQUIREMENTS	110V	110V/220V 1 PH
CHARGING AMPERAGE	2.5 AMPS.	8 AMPS.
CONTROL	LCD DISPLAY 5" / 127MMMM	LCD DISPLAY 4.3" / 109MM
SYNCHRONIZATION	CONTINUOUS WITHOUT INCREMENTS	CONTINUOUS WITHOUT INCREMENTS
CONTROL MODES	SINGLE, PAIRED OR GROUP (UP TO 10)	SINGLE, PAIRED OR GROUP (UP TO 8)
PROTECTION CLASS	IP 54 - NEMA 35	IP54 - NEMA 35 / OPTIONAL WATER RESISTENT CABINET IP65 - NEMA 4X
COLUMN WEIGHT	1,525 LBS / 691KG	1,300 LB. / 590KG
LENGTH OF COLUMN	45.5" / 1156MM	47.9" / 1218MM
WIDTH OF COLUMN	45.3" / 1151MM	45.3" / 1151MM
HEIGHT OF COLUMN	89"	94.4" / 2400MM
PART NUMBER	MCO19B-4-76	MCO`14B-4-56

Disclaimer: TLS Inc. is constantly updating their products to maintain the highest possible standards of performance and safety. The specifications included in this brochure are only accurate at the time of printing and are subject to change without notice.

EQUIPMENT FOOTPRINT MCO19B-4-76

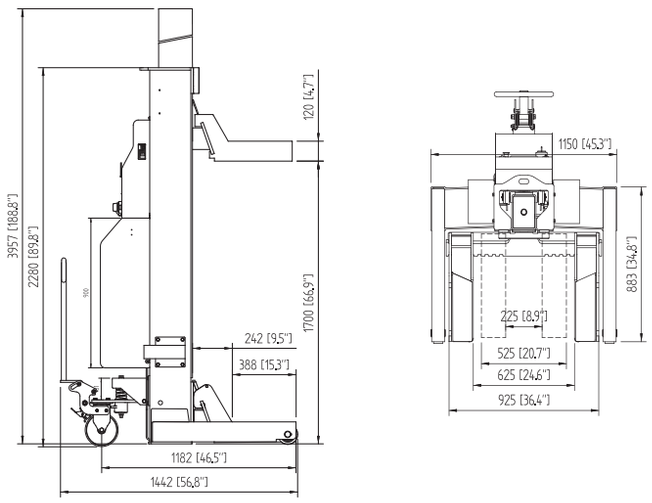

EQUIPMENT FOOTPRINT MCO14B-4-56

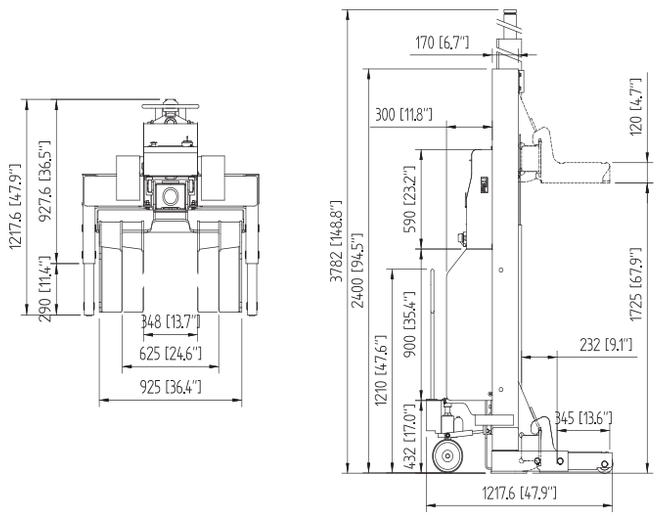

CONTACT US

CALL: 866-799-5438
WWW.TLSLIFTS.COM

THE LIFTSUPERSTORE
RETAIL LOCATIONS THROUGHOUT CANADA
HEADOFFICE & WAREHOUSE
2300 SPEERS RD OAKVILLE ONTARIO

MOBILE COLUMNS 19,000 LB./ 8.6T OR 14,500 LB. / 6.6T CAPACITY

MOBILE COLUMNS
MCO19B-4-76B MCO14.5B-4-58W

OMER MCO COLUMNS ARE DESIGNED TO BE INFORMATIVE AND REQUIRE LESS TRAINING

MAIN SCREEN WITH LIFTING HEIGHT & LOCK POSITION STATUS

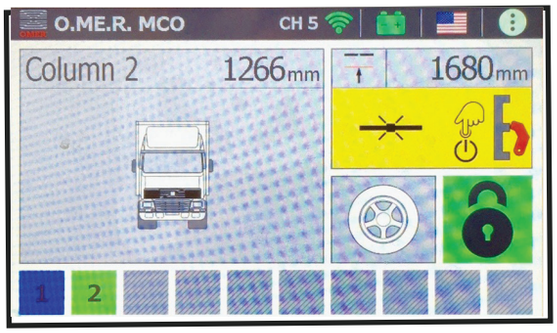

COLOURFUL PICTORAL DISPLAY IS INTUITIVE & EASY TO NAVIAGTE

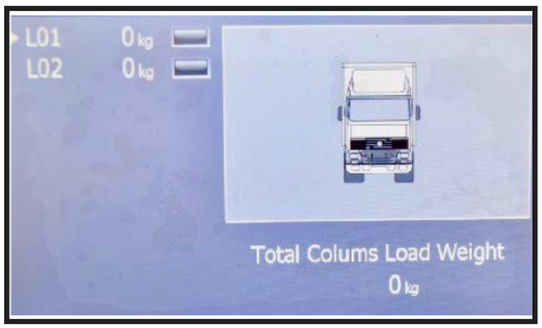

LOADED WEIGHT SCREEN

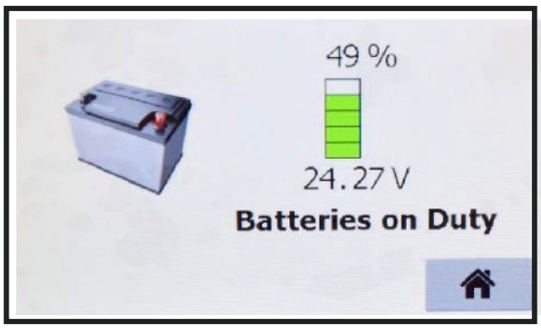

BATTERY STATUS

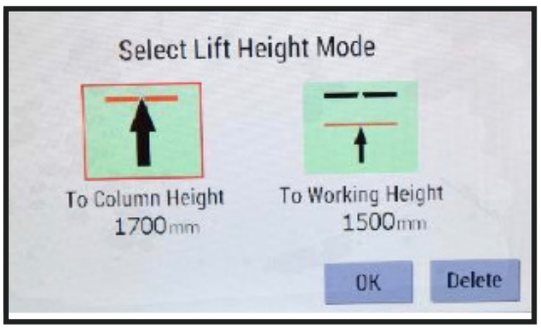

SET COLUMN WORKING HEIGHT

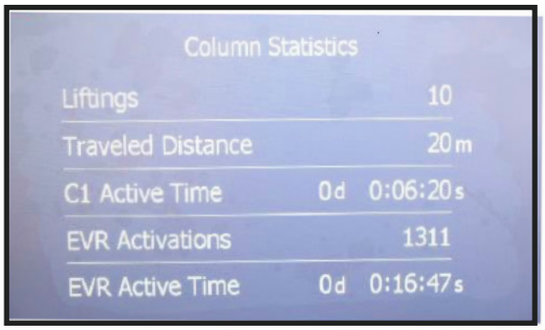

PERFORMANCE DATA

FEATURES

- BUILT TO HIGHER QUALITY STANDARD; MADE IN ITALY BY O.ME.R S.P.A, A WORLD LEADER IN HEAVY DUTY LIFTS FOR OVER 20 YEARS IN AN ISO 9001 FACILITY
- COMPACT DESIGN PROVIDES GREATER MANEUVERABILITY . "EASY STEER" SPRING ASSISTED STEERING HANDLE HAS A TIGHT TURNING RADIUS AND MORE EFFECTIVE ON ROUGH FLOOR SURFACES.
- GREATER FLEXIBILITY - OMER'S MOBILE COLUMNS CAN BE USED AS SINGLE, PAIRS OR SETS OF UP TO 8 OR 10. MODELS AVAILABLE WITH A CAPACITY OF 14,500 LB. / 6.5T OR 19,000 LB. / 8.6T CAPABLE OF LIFTING UP TO 56,000 LB. / 6.5T OR 76,000 LB. / 8.6VT. ADJUSTABLE FORKS CAPABLE OF TIRE DIAMETERS RANGING FROM 23" / 584MM TO 53.1" / 1346MM.
- PREMIUM OPTIONS AND ACCESSORIES CAN EXPAND THE CAPABILITIES & PRODUCTIVITY - WIDE RANGE OF ACCESSORIES INCLUDE PORTABLE ADJUSTABLE WHEEL STANDS, CHASSIS LIFTING BEAMS, FORK LIFT ADAPTER, LIGHT TRUCK ADAPTER, SNOW PLOW WING ADAPTER, PELICAN STYLE STREET SWEEPER ADAPTER AND NEMA 4X RATED WATER RESISTENT CABINET..
- LOWER MAINTENANCE COSTS - LIFETIME PET (TEFLON) CARRIAGE BEARINGS, PREMIUM FIAMM INDUSTRIAL STYLE "LEAD CALCIUM' BATTERIES WITH RECIRCULATION TECHNOLOGY, BOSCH PUMP AND MOTORS AND DOUBLE BAKE POWDER COAT FINISH, EXTENDS THE SERVICE LIFE AND LOWERS OPERATING COSTS.
- PRECISION LEVELLING & CONTROL - TABLET STYLE CONTROL WITH COLOR LCD DISPLAY PROVIDES LIVE PICTORIAL AND NUMERICAL INFORMATION INCLUDING LIFTING HEIGHT, WEIGHT, BATTERY STATUS AND 22 DIAGNOSTIC FAULT CODES.
- DESIGNED FOR GREATER TECHNICIAN PRODUCTIVITY - COLUMNS LIFT 69" / 1753MM IN 85 SECONDS. PREMIUM BATTERIES WILL PROVIDE UP TO 25 LIFTS (AT 85%) LOADED CAPACITY BEFORE REQUIRING A RECHARGE. TWO SPEED LOWERING WITH AUDIBLE ALARM ALLOWS FOR FAST AND SAFE LOWERING.